20th May

$$805 \div 35$$

$$\frac{9}{10} + \frac{5}{8}$$

Measure this angle

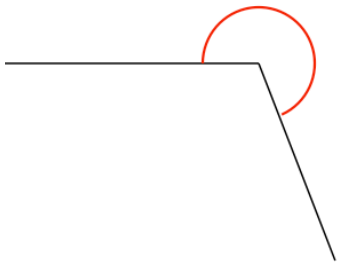

At the end of a film, the year is given in Roman numerals as MMIV

Write the year MMIV in figures.

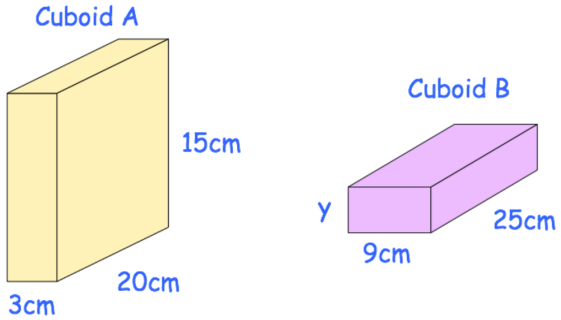

The volume of cuboid A is half the volume of cuboid B.

Find the height of cuboid B, y

© Corbettmaths 2017